Sheep & Goat Feeder

This galvanized sheep and goat feeder is designed to provide a durable and efficient feeding solution for your small livestock. The feeder is made of galvanized steel construction which makes it resistant to rust and corrosion, providing a long-lasting feeder.

Product No: 5005

Weight: 29kg (63 lbs)	Gauge: 14 Gauge / 40mm Pipe
Height: 38.5"	Galvanization: Galvanized
Length: 48"	Pull Strength: N/A
Width: 23"	Other: - N/A

Notes:

- Grain Tray
- Fully Galvanized

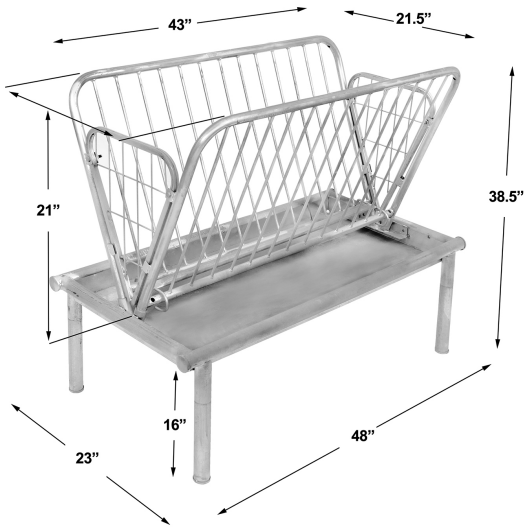

604.857.2436
www.edgelineproducts.com